Swivel Connection Bracket - Bright Zinc Plated

SWXL-10 & SWXL-12 | M10 & M12 Variants | For 21mm & 41mm Channel Systems

Adjustable swivel connection bracket for creating angled connections between channel sections or threaded rods. Suitable for both 21mm and 41mm channel systems, with a two-piece pivoting design that allows the connection angle to be adjusted to suit the installation. Supplied with two M10 x 16mm Grade 8.8 Bright Zinc Plated (BZP) pivot bolts fitted.

PRODUCT SPECIFICATION

Product Type	Swivel Connection Bracket
Material	Steel
Finish	Bright Zinc Plated (BZP)
Overall Length	65mm
Side Length	53mm
Internal Dimension	49mm
Height	39mm
Plate Thickness	5mm
Channel Compatibility	Standard 21mm and 41mm channel systems
Connection Type	Adjustable two-piece swivel connection with fitted pivot bolts
Pivot Bolts	2 x M10 x 16mm Grade 8.8 Bright Zinc Plated (BZP), fitted

AVAILABLE VARIANTS

Product Code	Fixing Size	Hole Diameter
SWXL-10	M10	10.73mm
SWXL-12	M12	12.73mm

KEY FEATURES

- Adjustable swivel mechanism
- Suitable for channel-to-channel connections
- Suitable for threaded rod connections
- 2 x M10 x 16mm Grade 8.8 BZP pivot bolts fitted

TYPICAL APPLICATIONS

Adjustable channel frameworks • Angled and right-angle channel connections • Threaded rod suspension systems • Mechanical and electrical support systems • HVAC and ventilation supports • Pipework and cable containment supports

TECHNICAL DRAWING

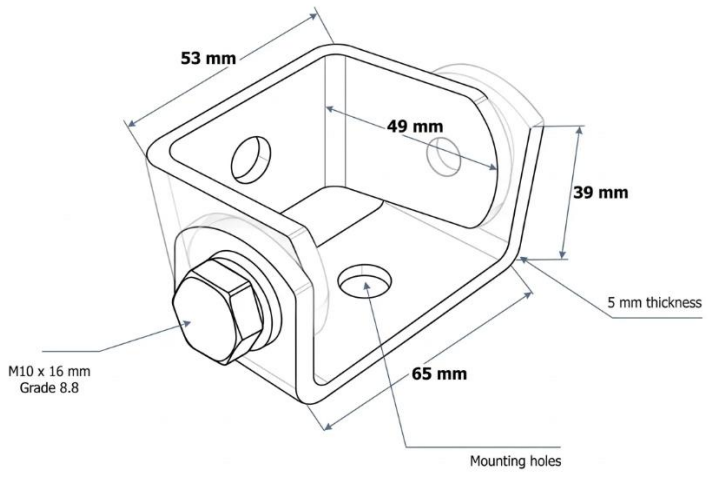

All dimensions in mm. Drawing not to scale.

To Order: Visit directchannel.uk.com or call **0121 270 8507** | Trade & bulk enquiries: **sales@directchannel.uk.com** | Most orders dispatched same or next working day.

DISCLAIMER & LEGAL NOTICE
Direct Channel Support Systems Ltd has made every reasonable effort to ensure the accuracy and completeness of the information contained in this datasheet. All product specifications, dimensions, and technical details are provided for guidance purposes only. Direct Channel Support Systems Ltd reserves the right to alter, update, or withdraw any product or specification at any time and without prior notice. To the fullest extent permitted by law, Direct Channel Support Systems Ltd accepts no liability for any loss, damage, or consequential loss arising from reliance on the information contained herein. Customers are advised to verify all specifications prior to ordering. For the most current product information visit directchannel.uk.com or contact our sales team.