3 Leg Wing Tower Bracket - Hot Dip Galvanised

128mm Overall | 105mm Height | 42mm Dimension | Product Code D039.W3

Three-leg wing tower bracket designed for multi-directional strut channel support and fixing assemblies.

SPECIFICATION

Product Type	3 Leg Wing Tower Bracket
Product Code	D039.W3
Overall Dimension	128mm
Height	105mm
Additional Dimension	42mm
Plate Thickness	5mm
Weight	0.640kg
Finish	Hot Dip Galvanised (HDG), 50-60 microns

KEY FEATURES

- Three-leg tower bracket design
- Multi-directional strut connection
- 5mm mild steel plate
- Hot dip galvanised finish

TECHNICAL DRAWING

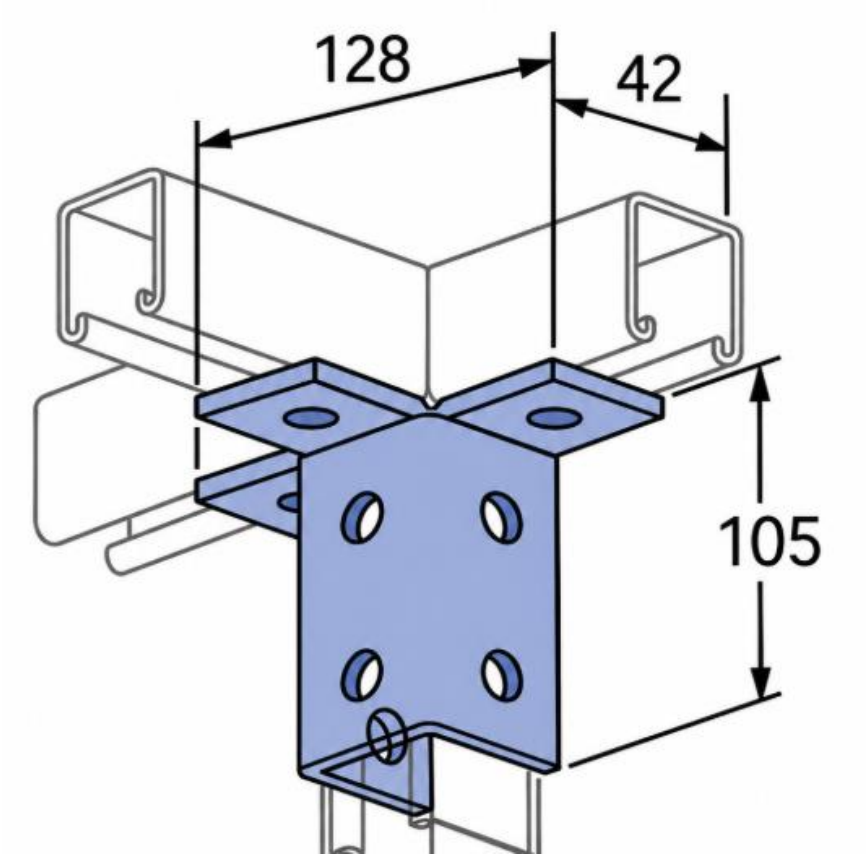

D039.W3 dimensional reference: 128mm overall dimension, 105mm height and 42mm dimension. Not to scale.

To Order: Visit directchannel.uk.com or call **0121 270 8507** | Trade & bulk enquiries: **sales@directchannel.uk.com** | Most orders dispatched same or next working day.

DISCLAIMER & LEGAL NOTICE
Direct Channel Support Systems Ltd has made every reasonable effort to ensure the accuracy and completeness of the information contained in this datasheet. All product specifications, dimensions, and technical details are provided for guidance purposes only. Direct Channel Support Systems Ltd reserves the right to alter, update, or withdraw any product or specification at any time and without prior notice. To the fullest extent permitted by law, Direct Channel Support Systems Ltd accepts no liability for any loss, damage, or consequential loss arising from reliance on the information contained herein. Customers are advised to verify all specifications prior to ordering. For the most current product information visit directchannel.uk.com or contact our sales team.