Double Gusset Base Plate - Hot Dip Galvanised

257mm Length | 150mm Height | 85mm Pillar Gap | Product Code D038

Heavy-duty double gusset base plate designed for supporting and fixing strut channel assemblies.

SPECIFICATION

Product Type	Double Gusset Base Plate
Product Code	D038
Overall Length	257mm
Height	150mm
Pillar Gap	85mm
Width	40mm
Plate Thickness	5mm
Hole Diameter	14mm
Weight	1.80kg
Finish	Hot Dip Galvanised (HDG), 50-60 microns

KEY FEATURES

- Twin upright support plates
- Triangular gusset reinforcement
- Ø14mm fixing holes
- 5mm plate thickness

TECHNICAL IMAGE

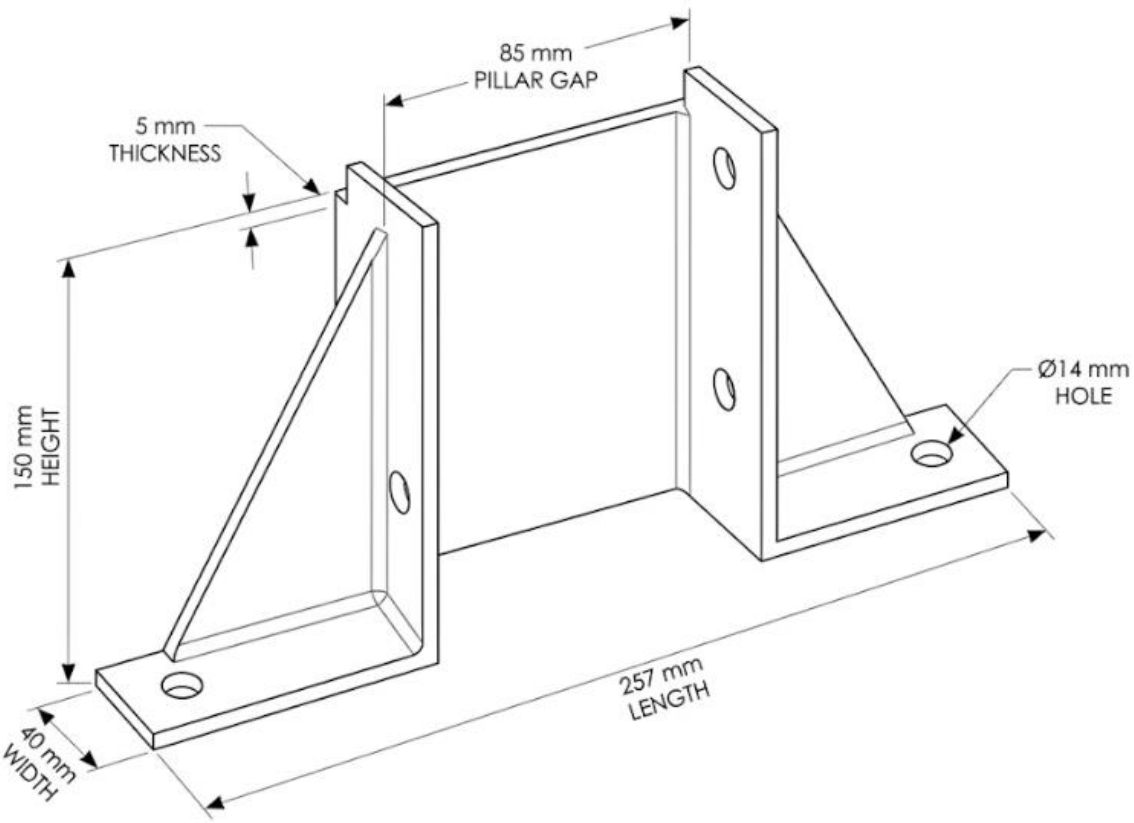

D038 dimensional reference: 257mm overall length, 150mm height, 85mm pillar gap, 40mm width, 5mm thickness and Ø14mm fixing holes.

To Order: Visit directchannel.uk.com or call **0121 270 8507** | Trade & bulk enquiries: **sales@directchannel.uk.com** | Most orders dispatched same or next working day.

DISCLAIMER & LEGAL NOTICE
Direct Channel Support Systems Ltd has made every reasonable effort to ensure the accuracy and completeness of the information contained in this datasheet. All product specifications, dimensions, and technical details are provided for guidance purposes only. Direct Channel Support Systems Ltd reserves the right to alter, update, or withdraw any product or specification at any time and without prior notice. To the fullest extent permitted by law, Direct Channel Support Systems Ltd accepts no liability for any loss, damage, or consequential loss arising from reliance on the information contained herein. Customers are advised to verify all specifications prior to ordering. For the most current product information visit directchannel.uk.com or contact our sales team.