Single Gusset Base Plate - Hot Dip Galvanised

215mm Base Length | 153mm Height | Product Code D037G5 | Unistrut Type P2348-S1

Single gusset base plate designed for supporting and fixing strut channel assemblies.

SPECIFICATION

Product Type	Single Gusset Base Plate
Product Code	D037G5
Unistrut Type	P2348-S1
Base Length	215mm
Height	153mm
Base Dimensions	49mm and 40mm
Plate Thickness	5mm
Hole Diameter	14mm
Hole Position	As shown in the technical drawing
Weight	1.45kg
Finish	Hot Dip Galvanised (HDG), 50-60 microns

KEY FEATURES

- Single gusset support design
- 215mm base length
- Ø14mm fixing holes
- 5mm plate thickness

TECHNICAL DRAWING

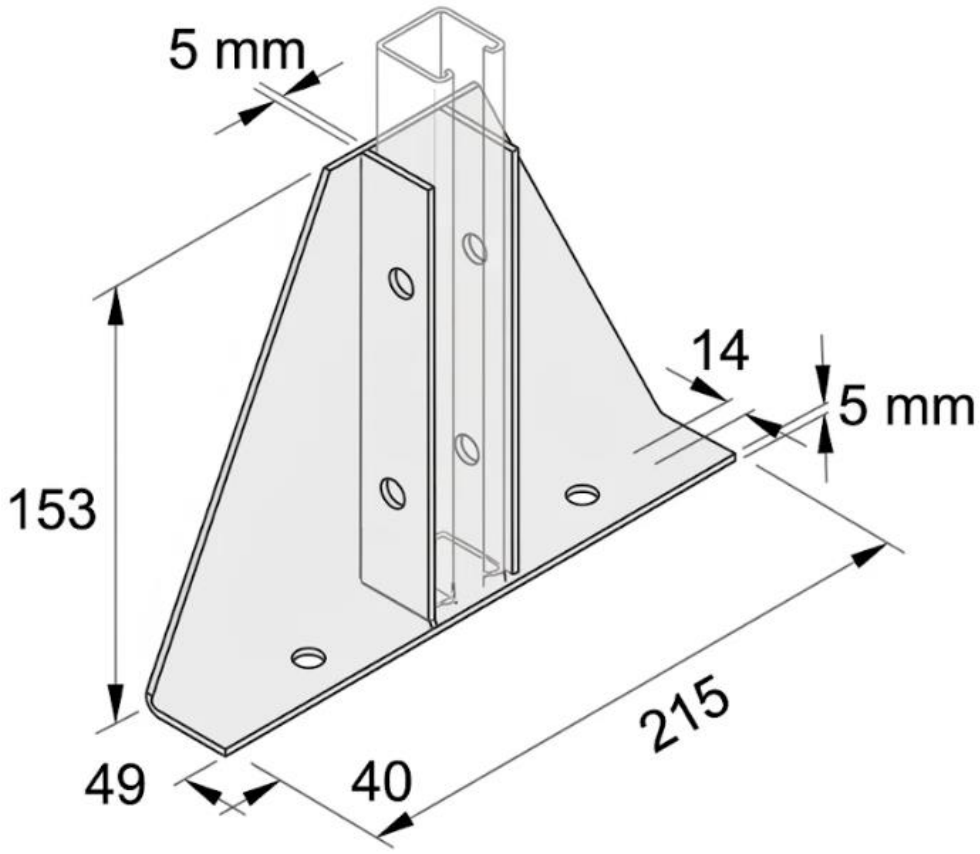

D037G5 dimensional reference: 215mm base length, 153mm height, 49mm and 40mm base dimensions, 5mm plate thickness and Ø14mm fixing holes. Not to scale.

To Order: Visit directchannel.uk.com or call **0121 270 8507** | Trade & bulk enquiries: **sales@directchannel.uk.com** | Most orders dispatched same or next working day.

DISCLAIMER & LEGAL NOTICE
Direct Channel Support Systems Ltd has made every reasonable effort to ensure the accuracy and completeness of the information contained in this datasheet. All product specifications, dimensions, and technical details are provided for guidance purposes only. Direct Channel Support Systems Ltd reserves the right to alter, update, or withdraw any product or specification at any time and without prior notice. To the fullest extent permitted by law, Direct Channel Support Systems Ltd accepts no liability for any loss, damage, or consequential loss arising from reliance on the information contained herein. Customers are advised to verify all specifications prior to ordering. For the most current product information visit directchannel.uk.com or contact our sales team.