Double Channel Base Plate - Hot Dip Galvanised

200 x 100mm Base | 93mm Bracket Dimension | 40mm Height | Product Code D036

Double channel base plate designed for supporting and fixing strut channel assemblies.

SPECIFICATION

Product Type	Double Channel Base Plate
Product Code	D036
Base Dimensions	200 x 100mm
Bracket Dimension	93mm
Height	40mm
Fitting Width	41mm
Plate Thickness	5mm
Hole Diameter	14mm
Hole Position	As shown in the technical drawing
Weight	0.998kg
Finish	Hot Dip Galvanised (HDG), 50-60 microns

KEY FEATURES

- Double channel support base
- 41mm fitting width
- Ø14mm fixing holes
- 5mm plate thickness

TECHNICAL DRAWING

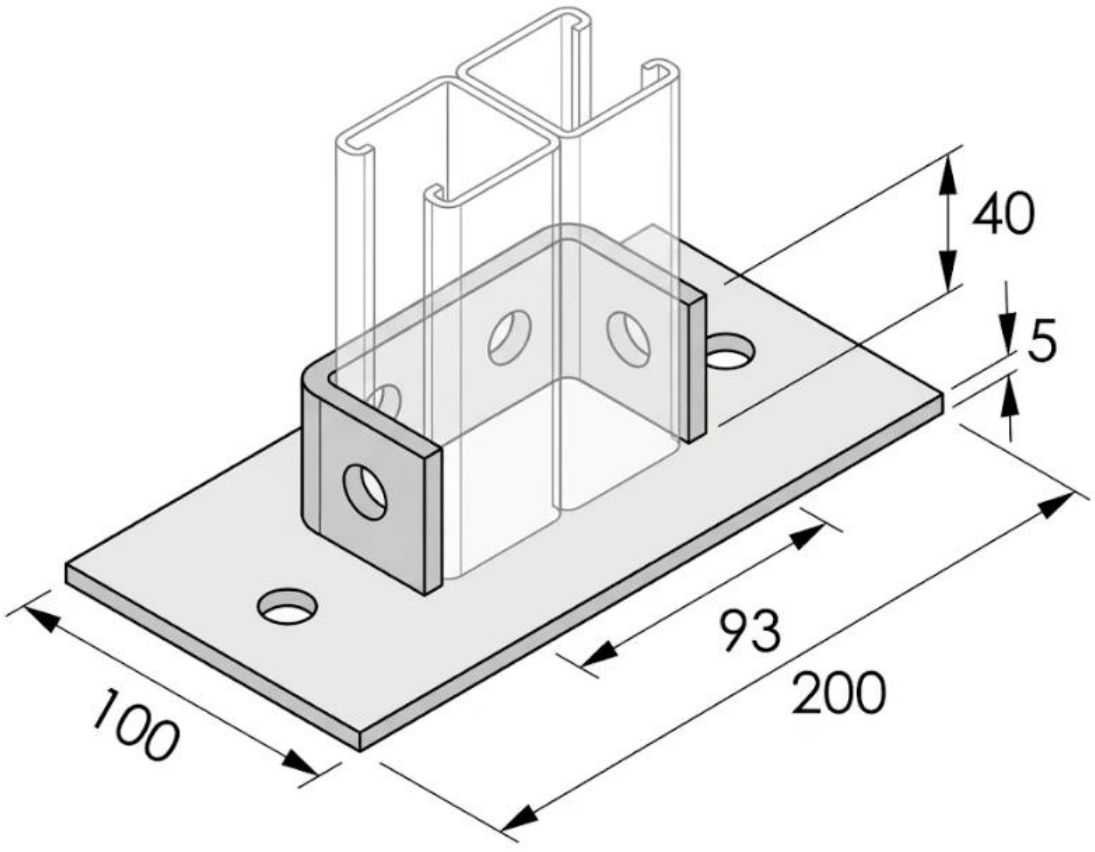

D036 dimensional reference: 200 x 100mm base, 93mm bracket dimension, 40mm height, 41mm fitting width, 5mm thickness and Ø14mm fixing holes. Not to scale.

To Order: Visit directchannel.uk.com or call **0121 270 8507** | Trade & bulk enquiries: **sales@directchannel.uk.com** | Most orders dispatched same or next working day.

DISCLAIMER & LEGAL NOTICE
Direct Channel Support Systems Ltd has made every reasonable effort to ensure the accuracy and completeness of the information contained in this datasheet. All product specifications, dimensions, and technical details are provided for guidance purposes only. Direct Channel Support Systems Ltd reserves the right to alter, update, or withdraw any product or specification at any time and without prior notice. To the fullest extent permitted by law, Direct Channel Support Systems Ltd accepts no liability for any loss, damage, or consequential loss arising from reliance on the information contained herein. Customers are advised to verify all specifications prior to ordering. For the most current product information visit directchannel.uk.com or contact our sales team.