82mm Long Top Hat U Bracket - Hot Dip Galvanised

130mm Overall | 43mm Inner Dimension | 83mm Side Dimension | Product Code D031

Top hat U bracket designed for use in strut channel support and fixing assemblies.

SPECIFICATION

Product Type	82mm Long Top Hat U Bracket
Product Code	D031
Overall Dimension	130mm
Inner Dimension	43mm
Side Dimension	83mm
Fitting Width	40mm
Plate Thickness	5mm
Hole Diameter	14mm
Hole Position	20mm from the centre of the hole to the end of the fitting
Weight	0.410kg
Finish	Hot Dip Galvanised (HDG), 50-60 microns

KEY FEATURES

- Long top hat U bracket design
- 40mm fitting width
- Three Ø14mm fixing holes
- 5mm plate thickness

TECHNICAL DRAWING

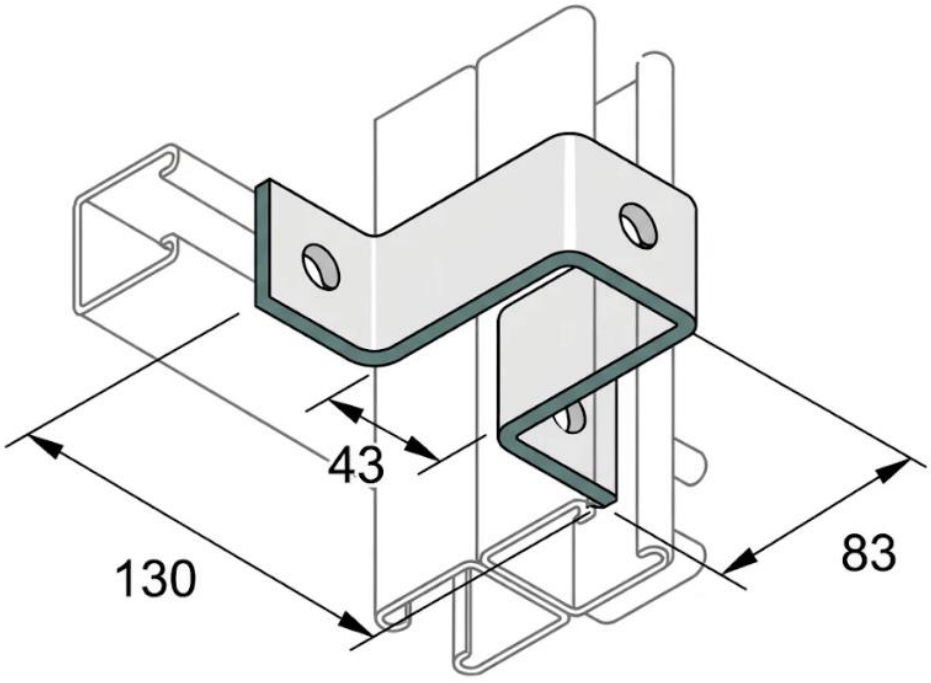

D031 dimensional reference: 130mm overall dimension, 43mm inner dimension, 83mm side dimension, 40mm fitting width, 5mm thickness and Ø14mm fixing holes. Not to scale.

To Order: Visit directchannel.uk.com or call **0121 270 8507** | Trade & bulk enquiries: **sales@directchannel.uk.com** | Most orders dispatched same or next working day.

DISCLAIMER & LEGAL NOTICE
Direct Channel Support Systems Ltd has made every reasonable effort to ensure the accuracy and completeness of the information contained in this datasheet. All product specifications, dimensions, and technical details are provided for guidance purposes only. Direct Channel Support Systems Ltd reserves the right to alter, update, or withdraw any product or specification at any time and without prior notice. To the fullest extent permitted by law, Direct Channel Support Systems Ltd accepts no liability for any loss, damage, or consequential loss arising from reliance on the information contained herein. Customers are advised to verify all specifications prior to ordering. For the most current product information visit directchannel.uk.com or contact our sales team.