90 Degree Right Angle 2x1 Hole - Hot Dip Galvanised

47 x 98mm | 3 x Ø14mm Holes | Product Code D010G5

90 degree right angle plate with two fixing holes in one leg and one fixing hole in the other for use with strut channel support and fixing assemblies.

SPECIFICATION

Product Type	90 degree right angle 2x1 hole
Product Code	D010G5
Leg Dimensions	47 x 98mm
Width	40mm
Plate Thickness	5mm
Hole Diameter	14mm
Hole Position	20mm from the centre of the hole to the end of the fitting
Weight	0.21kg
Finish	Hot Dip Galvanised (HDG), 50-60 microns

KEY FEATURES

• 90 degree right angle form	• Two Ø14mm fixing holes in one leg and one in the other
• 40mm fitting width	• 5mm plate thickness

TECHNICAL DRAWING

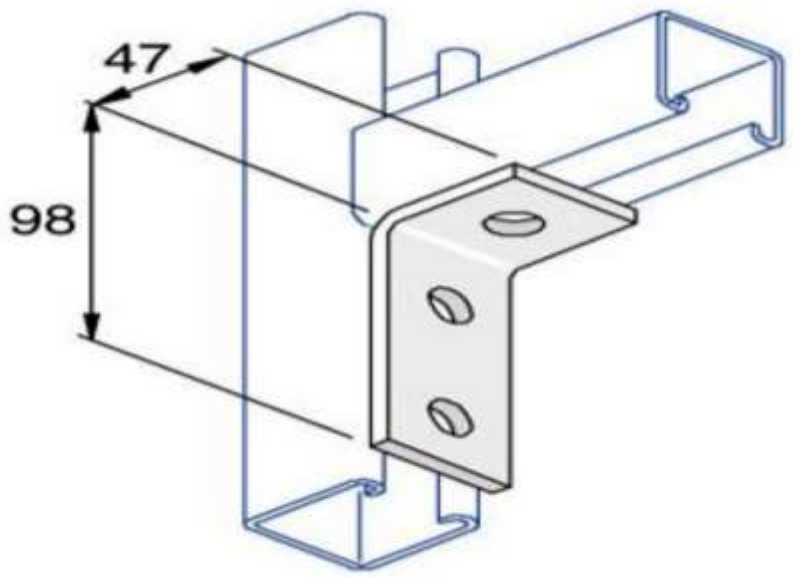

D010G5 technical drawing: 40mm horizontal leg, 57mm vertical leg, 40mm width, 5mm thickness and two Ø14mm holes. Hole centres are 20mm from the free ends. Not to scale.

To Order: Visit directchannel.uk.com or call **0121 270 8507** | Trade & bulk enquiries: **sales@directchannel.uk.com** | Most orders dispatched same or next working day.

DISCLAIMER & LEGAL NOTICE
Direct Channel Support Systems Ltd has made every reasonable effort to ensure the accuracy and completeness of the information contained in this datasheet. All product specifications, dimensions, and technical details are provided for guidance purposes only. Direct Channel Support Systems Ltd reserves the right to alter, update, or withdraw any product or specification at any time and without prior notice. To the fullest extent permitted by law, Direct Channel Support Systems Ltd accepts no liability for any loss, damage, or consequential loss arising from reliance on the information contained herein. Customers are advised to verify all specifications prior to ordering. For the most current product information visit directchannel.uk.com or contact our sales team.